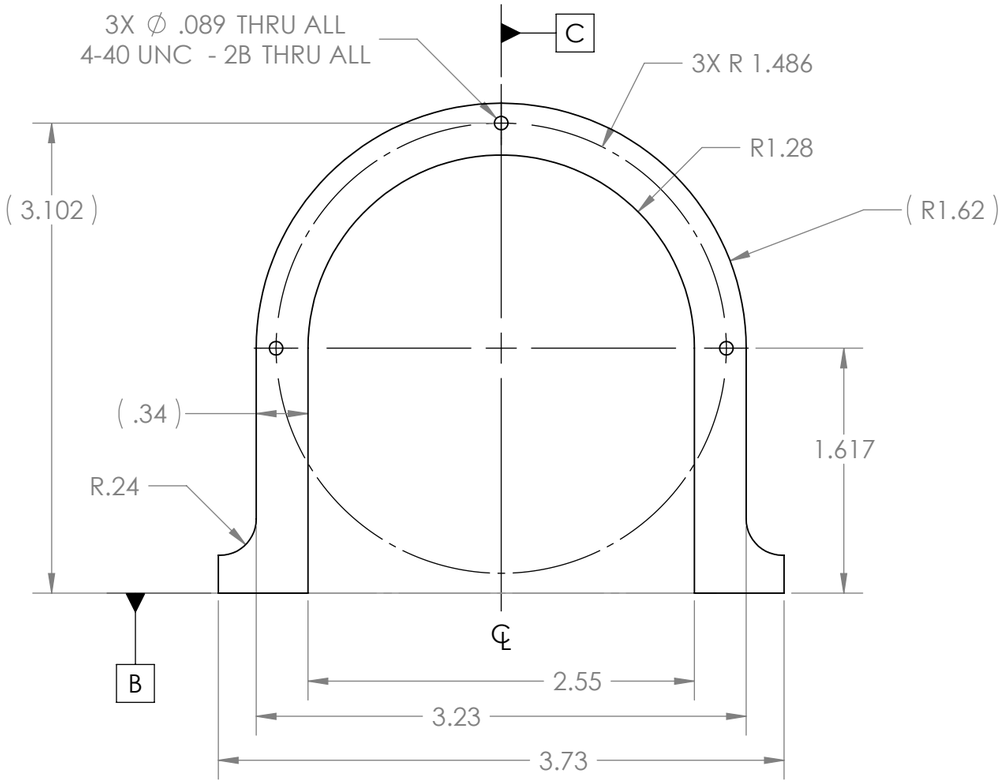

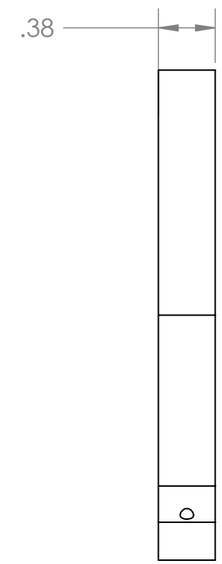

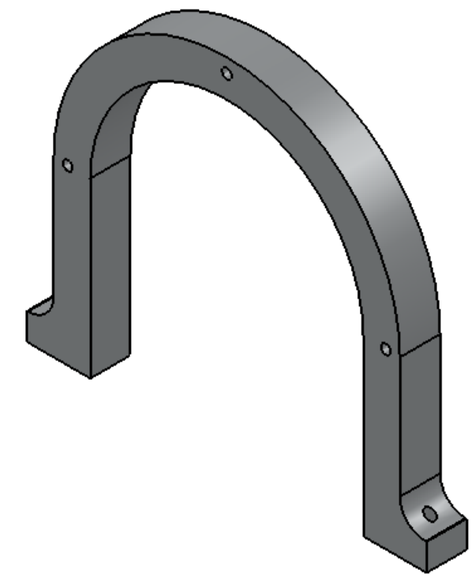

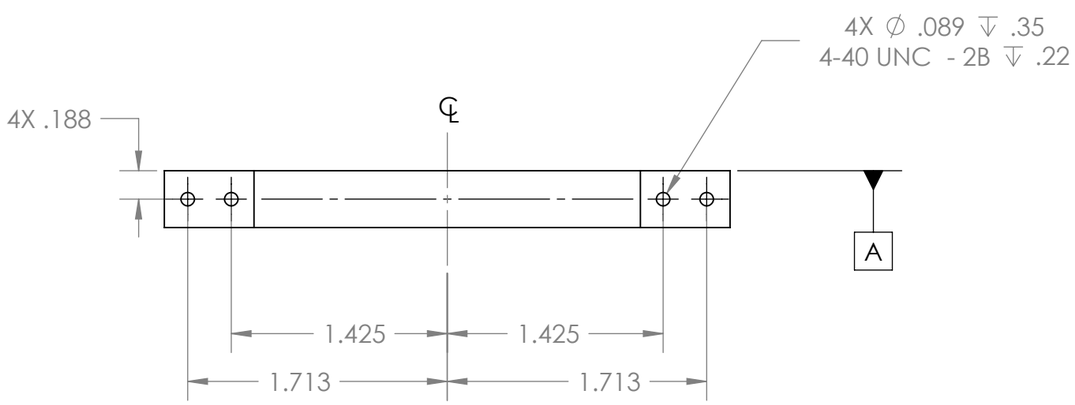

1. DIMENSIONS ON ANODIZED PARTS PARTS ARE TO BE CONSIDERED FINISHED SIZE. ALLOWANCES MUST BE MADE FOR PLATING THICKNESS
2. ALL SURFACES & CORNERS MUST BE WITHOUT TOOL MARK, NICKS OR SCRATCHES

UNLESS OTHERWISE SPECIFIED:		NAME	
DIMENSIONS ARE IN INCHES ANGULAR: MACH ±.2 TWO PLACE DECIMAL ±0.030 THREE PLACE DECIMAL ±0.003 METRIC TOLERANCES: TWO PLACE DECIMAL ±0.08 MM	DRAWN	URQUHART	TITLE:
	DATE	05-11-2011	AVT GC750 ENCLOSURE MOUNTING HORSESHOE
	ENG APPR.		
	MFG APPR.		
INTERPRET GEOMETRIC TOLERANCING PER:	Q.A.		SIZE B / DWG. NO. STRY-022 / REV
MATERIAL ALUM. 6061-T6	COMMENTS:		
FINISH HARD ANODIZE			SCALE: 1:1 / WEIGHT: / SHEET 1 OF 1
DO NOT SCALE DRAWING			